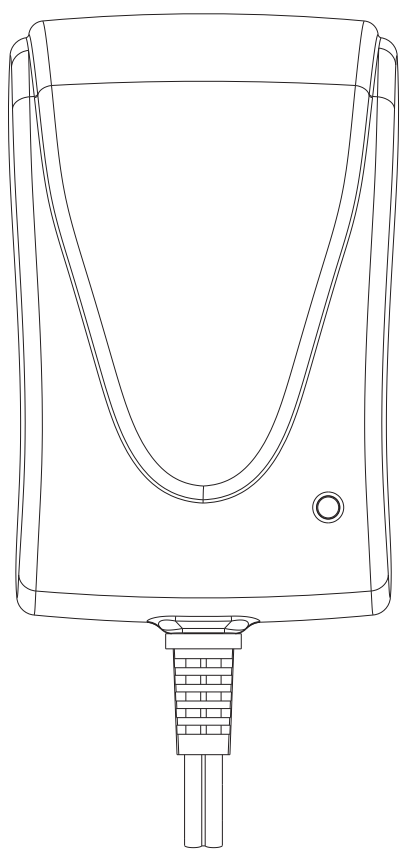

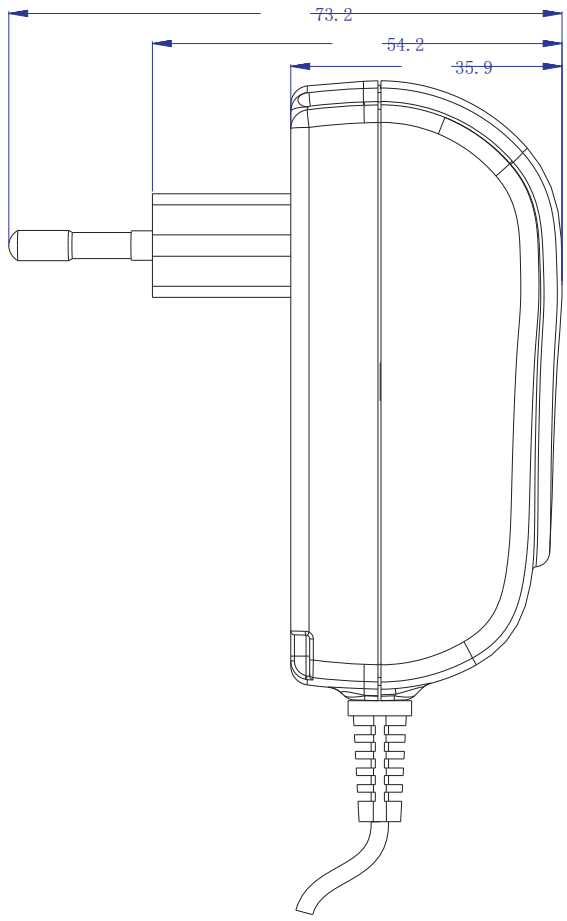

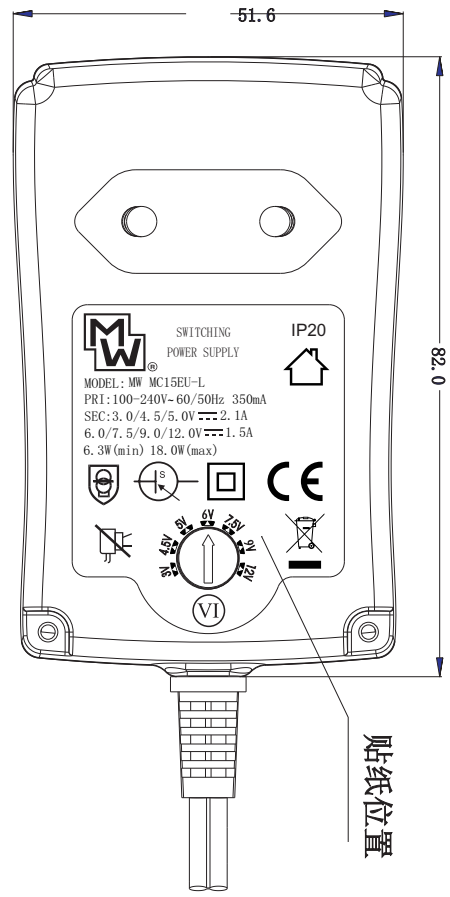

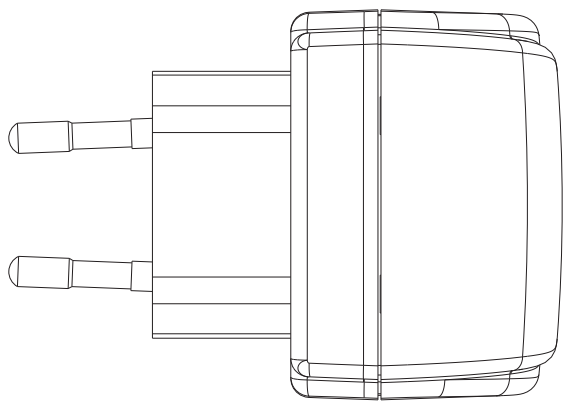

MC15EU-L
2022-11-04

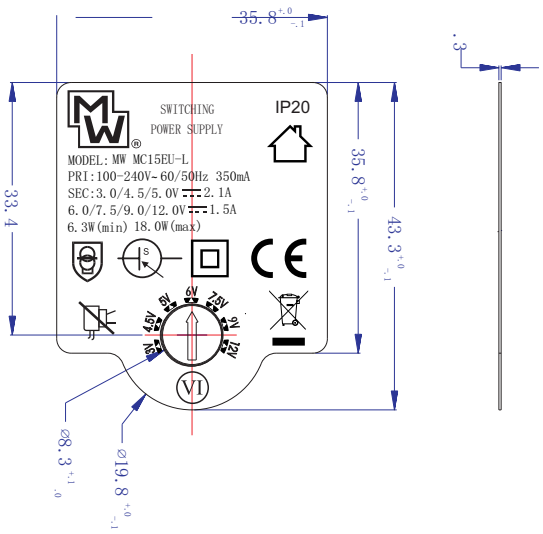

2TP-3R15U